Easy-Laser®

Release Notes

Note!

You will find the Installation instructions on the last page of the Release notes.

Programs

	E420	E530 E540	E710	E720	E910 E915	E920	E930	E940	E950 A/B/C	E960 A/B	E970	E975	E980
Values	*	*	*	*	*	*	*	*	*	*	*	*	*
Horizontal *Updated*	*	*	*	*		*	*	*	*	*	*	*	*
Vertical	*	*	*	*		*	*	*	*	*	*	*	*
Machine train (**)		*	*	*		*	*	*	*	*	*	*	*
Softfoot	*	*	*	*		*	*	*	*	*	*	*	*
Cardan			*	*		*	*	*	*	*	*	*	*
Straightness *Updated*			*	*		*	*	*	*	*	*	*	*
Straightness Half				*		*	*	*	*	*	*	*	*
Straightness Fourpoints				*		*	*	*	*	*	*	*	*
Straightness Multipoints				*		*	*	*	*	*	*	*	*
Straightness Centre				*		*	*	*	*	*	*	*	*
Roundness				*		*	*	*	*	*	*	*	*
Parallelism A			*	*		*	*	*	*	*	*	*	*
Parallelism B			*	*		*	*	*	*	*	*	*	*
Flatness			*	*		*	*	*	*	*	*	*	*
Twist			*	*		*	*	*	*	*	*	*	*
Spindle				*		*	*	*	*	*	*	*	*
Squareness				*		*	*	*	*	*	*	*	*
Flange flatness			*	*	*	*	*	*	*	*	*	*	*
Flange flatness section			*	*	*	*	*	*	*	*	*	*	*
Partial Flange flatness			*	*	*	*	*	*	*	*	*	*	*
Flange parallelism				*	*	*	*	*	*	*	*	*	*
Offset and Angle			*	*		*	*	*	*	*	*	*	*
BTA		*	*	*		*	*	*	*	*	*	*	*
Vibration		*	*	*		*	*	*	*	*	*	*	*

(**) The program Machine train(3) is included in E530 and E540.

Note! If the programs are not visible on the main menu after updating the software, you might need a new license. Please contact **order@damalini.se**

Easy-Laser AB, Sweden
Phone: +46 31 708 63 00 E-mail: info@easylaser.com Web: www.easylaser.com

EASY-LASER®

Release notes version 11.2

- It is now possible to select two feet pair for the tail stock machine in Horizontal Shaft.
- System stability improvements.

Bugs fixed regarding:

- Mirrored machine functionality in Horizontal Shaft.
- Navigation to unmeasured points in Straightness.
- Display unit connected to a PC using a USB cable.
- System update.

.

Release notes version 11.1

This system version supports the new E720 license. The programs included in the E720 license are listed on the first page. The E720 Shaft system contains all hardware as the E710 system, plus more. The laser transmitter D22 for example.

Release notes version 11.0

Partial Flange Flatness – new program

New program, included in the following systems:
E710, E910/915, E920, E930, E940, E950, E960, E970 and E980.

The program Partial Flange Flatness is primarily used when you want to measure only a part of a large flange. For example when a large wind tower is split in half before transportation.

Minimum no. of measurements points

One circle: as a minimum, you need to measure four points.

Two or more circles: as a minimum, you need to measure all circles on two positions, see image.

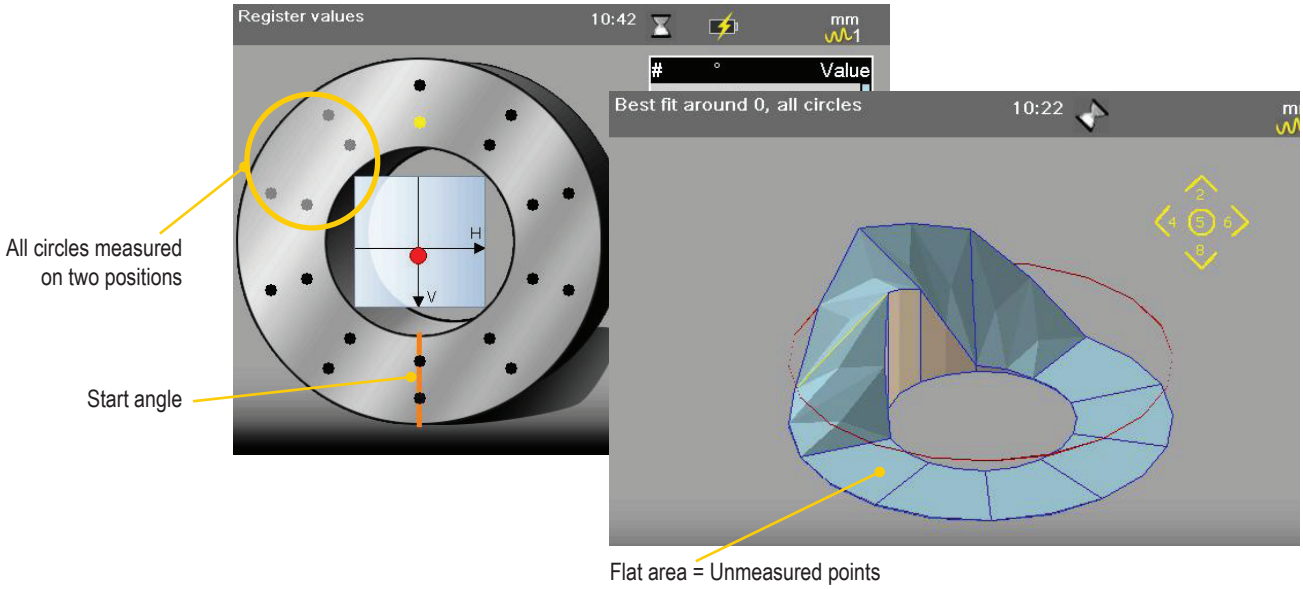

Flange Flatness Section

- We have increased the number of merge points to ensure a more accurate result.
- The filter is increased by two steps when measuring merge points.
- The merge points are analyzed and if uncertain points are found, a warning is displayed in the result. Uncertain merge points are also noted in the report.

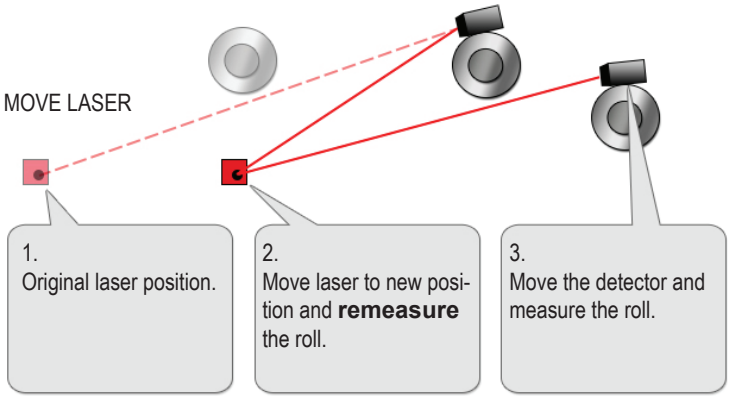

Flange Flatness and Flange Flatness Section

- Reference points are now visible in the 3D view.
- Point #1 has been corrected in the 3D view.
- It is now possible to register values when there is an edge warning.
- The pdf-report is now scaled correctly.

Parallelism B – Move laser

From the Result view, it is now possible to select  and move the laser. You need to remeasure the roll after the move.

Straightness

- The calculations for ISO standard tolerance has been updated.
- It is possible to enter diameter on an opened Straightness multipoint measurement.
- It is now possible to enter diameter with decimals in Straightness multipoint.

Flatness

- The calculations for ISO standard tolerance has been updated.

Softfoot

- The calculations has been improved to make it more stable.
- When you measure Softfoot, the detector filter is now increased by three steps (maximum to filter 7). If you measure with a higher filter than 7, that filter will remain. When the Softfoot measurement is done, the filter is restored.

Shaft

- The tailstock image is corrected in thermal compensation and in the report.
- It is now possible to enter negative feet values in the table shown when you have more than three feet pair.
- The calculations for feet values on **mirrored machines** has been updated.

Offset and Angle

- It is now possible to toggle between showing the value as **mm/100** or **mm/m**. Select  to toggle.
- It is now possible to open a target without having measuring units attached solved.

Other updates

- Start-up of system improved and quicker.
- System improvements to make it more stable.

Release notes version 10.2

A bug in the program Flange Flatness Section has been corrected.

Release notes version 10.1

Minor updates:

- An error message shown at startup has been removed. Note, install the version 10.1 and **restart the system**.
- In the program Flange Flatness, the Chinese font has been added in the distance view.

Release notes version 10.0

Roundness – new program

New program, included in the following systems: E920, E930, E940, E950, E960, E970 and E980. Roundness is used to measure for example single bearings. With the program Straightness Multipoint, you can measure several objects (for example bearing journals).

Measure

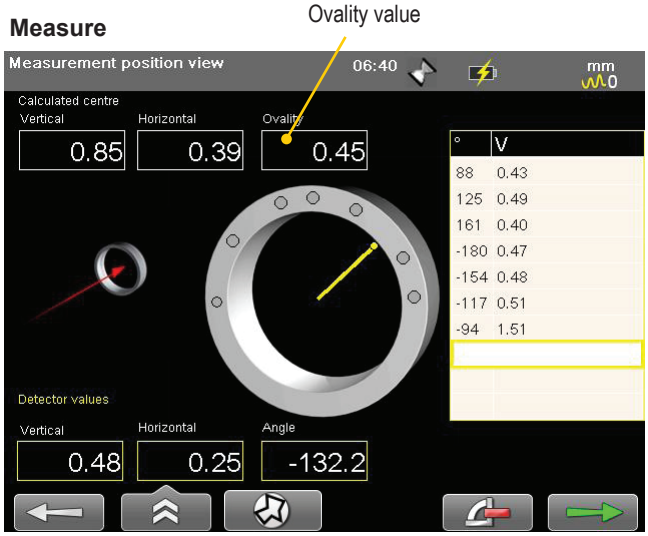

Result

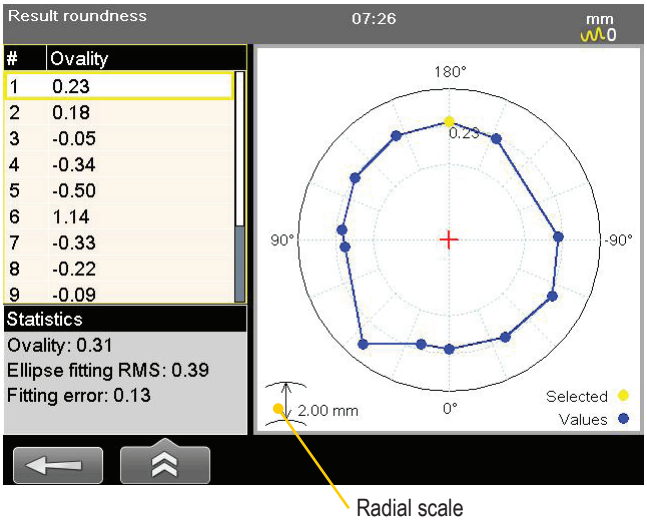

Straightness Multipoint

- It is now possible to show result after measuring one object (bearing for example).
- It is now possible to erase measurement points. Use left navigation button.
- It is now possible to enter nominal diameter.
- New and more robust method for calculating ovality.
- When you save a measurement, you can select to include the Roundness graphs in the report.
- We have added the Roundness view. See image below.

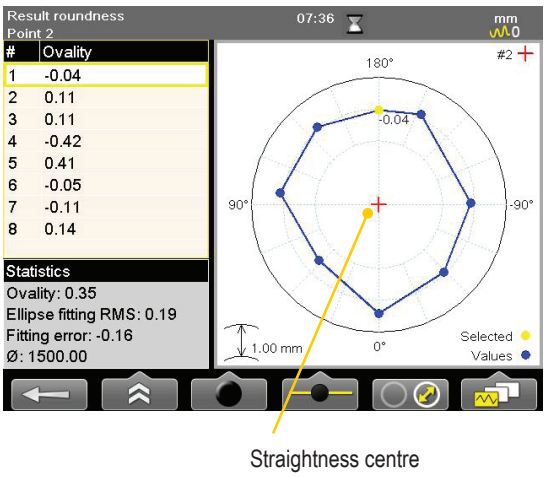

Flange Flatness

It is now possible to measure the points in different orders. The measuring order you select is saved and used if you open the file as template or favourite.

- Measure either inner or outer circle first.
- Measure radially, starting with either inner or outer measurement point.

Flange Section

It is now possible to measure one to five circles with the Flange Section program.

Minor system updates

- The E4 detector can now be used in all Straightness programs.
- The Vertical and Horizontal values have been corrected in the Spindle pdf-report.
- Autosaved Flange Flatness measurements can now be opened.
- It is now possible to measure using a Straightness template.
- It is now possible to use the E3 detector in the program Centre of circle.
- When generating a Spindle report from the File manager, the values were incorrect. This has been fixed.
- In the Straightness program, there were problems when rotating the coordinates of the detector. This has been fixed.

Calibrate D22 information updated

The information regarding on how to calibrate the laser transmitter D22 has been updated. It is included in some manuals and is also available as an information pamphlet.(Art no. 05-0798)


Easy-Laser®

Calibrate the spirit levels on D22

You can calibrate the spirit levels on the D22 laser transmitter. This is done at factory; but should be redone prior to a job. The spirit levels are scaled to 0.02 mm/m [4 sec sec.]. Accurate levelling to the spirit levels will achieve a repeated level-ling better than the scaling of the spirit levels, approximately 0.005 mm/m [1 sec sec.].

Adjust spirit level using this screw

Level

1. Place the D22 laser transmitter on a stable surface.
2. Adjust the spirit level to level using the screw.

5-10 m between laser and detector

Zero set

3. Select Zero to open the program Values.
4. Place the detector at a distance of 5-10 metres. Make sure that the laser beam hit the detector target.
5. Select Zero to zero set.

Rotate laser transmitter 180° and adjust spirit level using this screw

Index and level

6. Rotate the D22 180°.
7. Adjust laser beam until it is within detector target.
8. Adjust the spirit level to level using the screw.

Make value and adjust to 0.00 using this screw

Adjust value

9. Select Value to halve the value.
10. Adjust the value to 0.00 using the screw.

Adjust to spirit level using this screw

Calibrate spirit level

11. Calibrate the spirit level using the screw.
12. Rotate 180° to control.

Adjust second spirit level

Calibrate second spirit level

13. Rotate the D22 90° and turn the laser beam to the detector.
14. Repeat step 4–12.

Danaher AB, Sweden
Phone: +46 31 98 50 00 E-mail: info@danaher.com.info. www.danaher.com
© 2010 Danaher AB. We reserve the right to make modifications without prior notice. 05-0798 Version 1

EASY-LASER®

Release notes version 9.3

- It is now possible to generate reports in Russian again.
- It is now possible to enter Russian characters again.

Release notes version 9.1

Parallelism B – new program

Parallelism B is used for fast replacement and alignment of rolls in, for example, printing presses, paper machines and converting machines.
Easy-Laser® E975 offers precision of up to ±0.02 mm/m (0.001 degree).

First you measure the vertical angle, then the horizontal. Maximum distance between transmitter and detector is 20 metres. The rolls can be mounted at different heights.

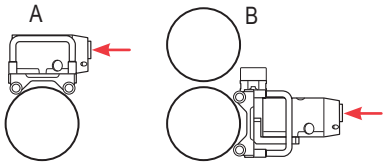

Alternative mounting of units:
A: Top attachment
B: Front attachment. If space on top is limited.

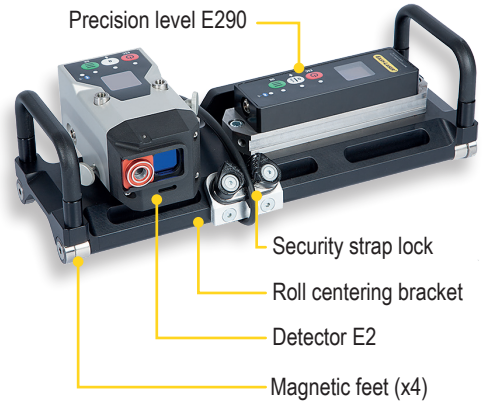

Bluetooth®

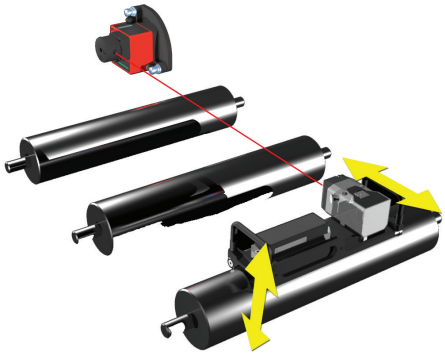

Vertical value

The vertical value is measured with the Precision level.

Horizontal value

The horizontal value is measured with the E2 detector.

Precision level in Values

Connect the Precision level to the Display unit via Bluetooth.

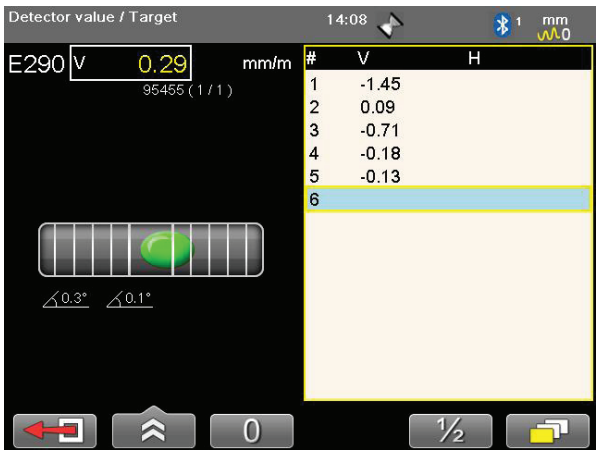

When measuring a shaft using the Precision level, we recommend that the shaft is no larger than 100 mm in diameter.

Max Ø100 mm

Parallelism A – new program

The laser beam is directed along the machine, and perpendicular to the measurement object. The beam is deflected at 90° with the aid of a penta prism. It is possible to measure a large number of objects on long machines by moving the penta prism. Examples of parallelism measurement include mutual parallelism between rolls and other surfaces in papermaking machines, printing presses, rolling mills, etc. Other examples include overhead tracks, rails, press machine tables.

Precision level

Measure

The horizontal value is measured with the detector.

The vertical value is measured with the Precision level.

Result

The result clearly show how to adjust the roll. The result can be displayed in a graph, table or side view.

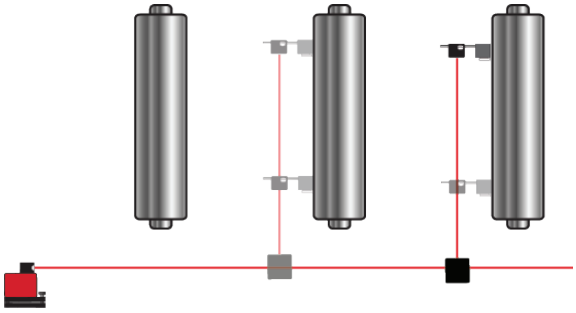

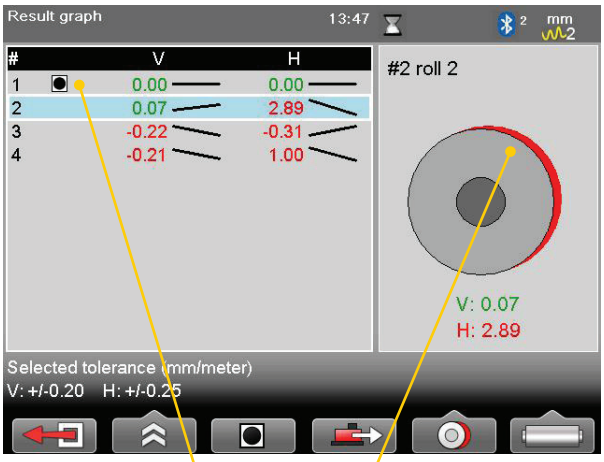

Roll set as reference

Red area indicates misalignment both in vertical and horizontal direction

Values

- The program Values now supports the Precision level E290.

Offset and Angle

- In the program Offset and Angle, angles are now displayed as in the Horizontal program. This means that the angles have been inverted and that the angle is shown as mm/100 (when using metric).
- Angle value is now shown in the program Offset and Angle.

Flange Flatness

- At least two circles are required when measuring Flange Flatness Section. This is to ensure an accurate measurement.
- There is now a warning before you delete a point in Flange Flatness Section and Flange Flatness.

Vertical

- When you open a saved measurement made with the program Vertical, it is now possible to alter the distances and also the tolerances.
- It is now possible to open a measurement made with the program Vertical, and save it with another name.

Other improvements

- In the Horizontal program for E710, a new image of a tailstock has been added.
- The file E_series_000 file is now always generated.
- All reports now show the correct temperature.
- Corrected spelling mistakes in the Korean translation.
- In the program Horizontal, the correct S-C distance is now shown when the machine has been mirrored.
- In the program BTA, the sheave face width can now be entered using decimals (0.1mm / 0.001 inch)

Installation instructions

1. Go to www.damalini.com > Download > Software > E series Display unit Firmware Update.
2. Download the following files:
   - **11.2**.zip
   - sysframe.35.zip
3. Unzip the files to the root of the USB memory stick.
4. Start the Display unit.
5. Insert the USB memory stick into the Display unit.
6. Select and .
7. Select and install **11.2.elu**.

If an error message is displayed, do as follows:

8. Select and install **sysframe.35.elu**.
9. Select and install **11.2.elu**.

Instrucciones de instalación

1. Vaya a www.damalini.com > Descargas > Software > Actualización del firmware, unidades de visualización serie E.
2. Descargue los siguientes archivos:
   - **11.2**.zip
   - sysframe.35.zip
3. Descomprima los archivos en la carpeta raíz de una memoria USB.
4. Encienda la unidad de visualización.
5. Inserte la memoria USB en la unidad de visualización.
6. Seleccione y
7. Seleccione e instale **11.2**.elu.

Si aparece un mensaje de error, haga lo siguiente:

8. Seleccione e instale sysframe.35.elu.
9. Seleccione e instale **11.2**.elu.

安装说明

1. 转至 www.damalini.com > 下载 > 软件 >E 系列显示器设备固件更新。
2. 下载以下文件：
   - **11.2**.zip
   - sysframe.35.zip
3. 将文件解压缩到 USB 记忆棒的根目录。
4. 启动显示器设备。
5. 将 USB 记忆棒插入显示器设备。
6. 选择 和 .
7. 选择并安装 **11.2**.elu。

如果显示错误消息，则执行以下操作：

8. 选择并安装 sysframe.35.elu。
9. 选择并安装 **11.2**.elu。

Installationsanweisungen

1. Gehen Sie auf www.damalini.com > Download > Software >E-Serie Display Unit Firmware Update.
2. Laden Sie die folgenden Dateien herunter:
   - **11.2**.zip
   - sysframe.35.zip
3. Dekomprimieren Sie die Dateien im Verzeichnis eines USB-Speichersticks.
4. Starten Sie die Anzeigeeinheit.
5. Schließen Sie den USB-Stick an die Anzeigeeinheit an.
6. Wählen Sie und
7. Wählen und installieren Sie **11.2**.elu.

Falls eine Fehlermeldung angezeigt wird, gehen Sie wie folgt vor:

8. Wählen und installieren Sie sysframe.35.elu.
9. Wählen und installieren Sie **11.2**.elu.

Инструкция по установке

1. Перейдите на веб-сайт www.damalini.com и выберите Download > Software >E series Display unit Firmware Update.
2. Загрузите следующие файлы:
   - **11.2**.zip
   - sysframe.35.zip
3. Разархивируйте файлы в корневую папку USB-носителя.
4. Включите дисплейный блок
5. Подключите USB-носитель к дисплейному блоку.
6. Выберите и
7. Выберите и установите **11.2**.elu.

При появлении сообщения об ошибке выполните следующее:

8. Выберите и установите sysframe.35.elu.
9. Выберите и установите **11.2**.elu.

Instructions relatives à l'installation

1. Consultez le site www.damalini.com > Téléchargement > Logiciel > Mise à jour du microprogramme de l'unité d'affichage de série E.
2. Téléchargez les fichiers suivants :
   - **11.2**.zip
   - sysframe.35.zip
3. Décompressez les fichiers à la racine d'une clé USB.
4. Allumez l'unité d'affichage.
5. Insérez la clé USB dans l'unité d'affichage.
6. Sélectionnez et
7. Sélectionnez et installez **11.2**.elu.

Si un message d'erreur s'affiche, procédez ainsi :

8. Sélectionnez et installez sysframe.35.elu.
9. Sélectionnez et installez **11.2**.elu.